A SYMBOL RATE MULTI-USER DOWNLINK BEAMFORMING APPROACH FOR WCDMA

Michael Joham, Wolfgang Utschick, and Josef A. Nossek

10th IEEE International Symposium on Personal, Indoor, and Mobile Radio Communications (PIMRC'99)

Osaka, Japan

volume 2, pp. 228–232, September 12th–15th, 1999

A SYMBOL RATE MULTI-USER DOWNLINK BEAMFORMING APPROACH FOR WCDMA

Michael Joham, Wolfgang Utschick and Josef A. Nossek
Institute for Circuit Theory and Signal Processing
Munich University of Technology
Arcisstr. 21, 80333 Munich, Germany
Wolfgang.Utschick@ei.tum.de

Abstract - The downlink spectral efficiency of 3rd generation mobile radio systems will be increasingly important due to the asymmetric features of several services. On the average, the downlink data rates will be higher than on the uplink. We propose to utilize adaptive antennas at the base stations because spatial interference suppression is able to reduce the near-far effect in the downlink of single-user detection DS-CDMA systems. The algorithm that calculates the downlink beamforming vectors takes into account the correlation properties of the spreading and scrambling codes. We presume an estimation of the downlink channel parameters in terms of the directions of arrival, delays, and medium term average path losses. In this approach, we also presume that the phases of the different multi-paths are known. Therefore, the mobile stations have to transmit the values of the phases every slot.

In WCDMA the users are distinguished by different spreading codes [1] which change over time due to the scrambling of the transmitted sequences. In [2] the beamforming vectors at the base stations were computed slot-wise, whereas in this contribution we favour a symbol rate evaluation of the beamforming vectors. The optimization approach in [2] compensates the non-ideal properties of the utilized spreading codes, which results in the optimal solution with respect to the signal to interference and noise ratio. However, the new approach optimizes the actual values of the decision variables of the rake demodulators.

I. SIGNAL MODEL

WCDMA was proposed by ETSI as a standard for FDD services [3]. The downlink baseband signal for the mobile $k \in \{1, ..., K\}$ may be expressed as

$$s_k(t) = \sum_{m=0}^{\infty} s_k^{(m)} c_k^{(m)}(t - mT_k), \tag{1}$$

$$c_k^{(m)}(t) = \sum_{q=1}^{Q_k} d_k^{(m)}[q] p_{\text{rrc}}(t - qT_c), \tag{2}$$

where $s_k^{(m)} \in \{-1, +1\}$ denotes the BPSK modulated symbols. The spreading code $c_k^{(m)}(t)$ for the m-th symbol of mobile k is composed of Q_k chips $d_k^{(m)}[q] \in \{-1, +1\}$ and is of length $T_k = Q_k T_c$. In WCDMA the chiprate equals $1/T_c = 4.096$ Mchips/s. The chip-waveform $p_{\text{rrc}}(t)$ has a square-root raised cosine spectrum with a rolloff factor of $\alpha = 0.22$. Note that the chips $d_k^{(m)}[q]$ are changing from symbol to symbol because they are defined as the multiplication of the q-th chip of the Orthogonal Variable Spreading Factor (OVSF) code belonging to mobile k and the $(mQ_k + q)$-th chip of the pseudo-noise scrambling code.

II. DOWNLINK DATA MODEL

We presume a channel with discrete multi-paths, thus, the channel impulse response $h_k^{(k',m)}(t)$ is FIR:

$$h_k^{(k',m)}(t) = \sum_{q=1}^{Q} h_{k,q}^{(k',m)} \delta(t - \tau_{k,q}), \tag{3}$$

where $\delta(t)$ denotes the Dirac delta function. Each tap $h_{k,q}^{(k',m)} \in \mathcal{C}$ belongs to the path q over which the m-th symbol of the signal k' of the base station is transmitted to the mobile station k (cf. Figure 1).The channel parameters estimated in the uplink are reciprocal in terms of the DOA (steering vector $\boldsymbol{a}_{k,q} \in \mathcal{C}^M$, where M is the number of antenna elements), the medium term average path loss $p_{k,q} \in \mathcal{R}$, and the path delay time $\tau_{k,q}$. We assume that the path losses $p_{k,q}$ are numbered in a descending order, thus, $p_{k,1}$ is the path loss of the strongest path to mobile k. However, the reciprocity does not hold for the path phase shift $\varphi_{k,q}$. To eliminate this lack of knowledge we propose a feedback of the phase shift $\varphi_{k,q}$ from the mobile station k to the base station. Because of the lower data rates in the uplink this feedback does not decrease the system capacity. Therefore, the base station is able to compute the q-th tap of $h_k^{(k',m)}(t)$:

$$h_{k,q}^{(k',m)} = p_{k,q} \boldsymbol{a}_{k,q}^H \boldsymbol{w}_{k'}^{(m)} e^{j\varphi_{k,q}}, \tag{4}$$

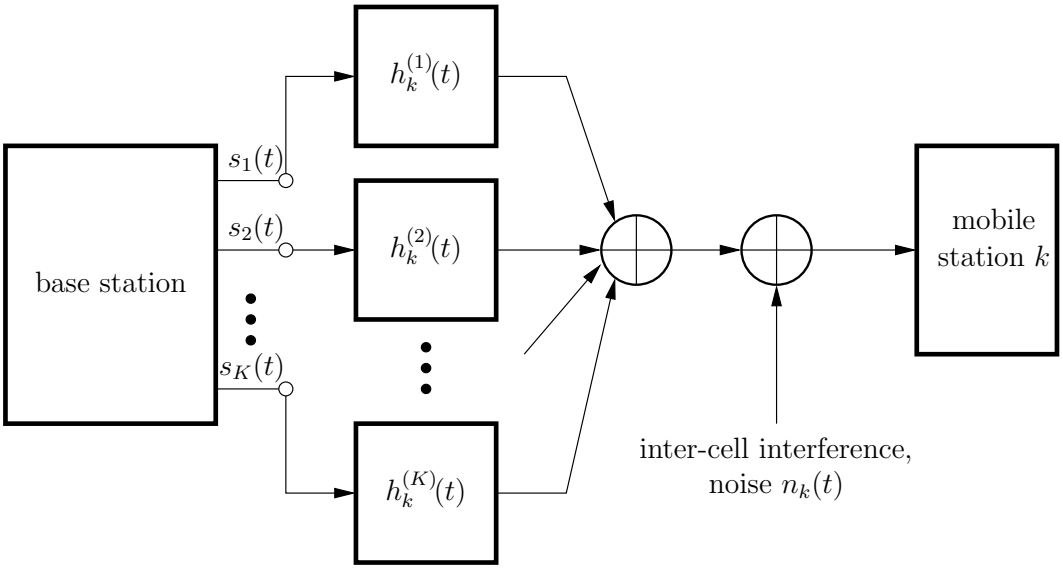

Figure 1: The channel of mobile station k.

where $\boldsymbol{w}_{k'}^{(m)} \in \mathcal{C}^M$ is the base station beamforming vector for the mobile k' which has to be estimated and $(\bullet)^H$ denotes conjugate transpose.
Note that the channel impulse responses change from symbol to symbol since we deploy symbol-wise beamforming. The alteration of the beamforming vector $\boldsymbol{w}_{k'}^{(m)}$ depends on the changing correlation properties of the scrambled spreading codes which will be outlined in the following sections. We further assume that the mobiles are equipped with a conventional maximum ratio combining rake receiver [4] (cf. Figure 2). First, the rake receiver estimates the channel impulse response $h_k^{(k,m)}(t)$. After the taps of the channel estimation are used to perform a maximum ratio combining, the resulting signal is correlated with the spreading code of mobile k. Thus, the decision signal of the rake demodulator k for the symbol m can be written as:

$$\begin{aligned} u_k^{(m)} &= \mathrm{Re}\Bigg\{ \sum_{k'=1}^{K} \sum_{q=1}^{Q} \sum_{f=1}^{N_f} \mathrm{CCF}_{k,k'}^{(m)}(\tau_{k,f} - \tau_{k,q}) v_{k,f} \\ &\quad p_{k,q} \boldsymbol{a}_{k,q}^H \boldsymbol{w}_{k'}^{(m)} s_{k'}^{(m)} e^{j\varphi_{k,q}} \Bigg\}. \end{aligned} \tag{5}$$

K, Q, and N_f are the numbers of mobile stations, paths, and rake fingers, respectively. $\mathrm{CCF}_{k,k'}^{(m)}(\tau)$ denotes the cross correlation function of the spreading codes of the mobiles k and k' for the symbol m. Note that the cross correlation function is equal to the auto correlation function, if $k = k'$. The rake finger weights $v_{k,f}$ are derived from the channel estimation taps. Hence,

$$\begin{aligned} v_{k,f} &= \mathrm{E}\left[\left(h_{k,f}^{(k,m)} \right)^* \right] \\ &= \mathrm{E}\left[p_{k,f} (\boldsymbol{w}_{k'}^{(m)})^H \boldsymbol{a}_{k,f} e^{-j\varphi_{k,f}} \right], \end{aligned} \tag{6}$$

where $(\bullet)^*$ and $\mathrm{E}[\bullet]$ denote the complex conjugate and the expectation value, respectively.

III. PREDEFINITION OF THE RAKE FINGER WEIGHTS

Since we propose a symbol-wise beamforming for the downlink, the channel impulse responses also change from symbol to symbol. The rake demodulator exploits the pilot symbols at the beginning of each slot to estimate the channel impulse response $h_k^{(k,m)}(t)$.

Our approach is to keep the beamforming vectors constant during the transmission of the pilot symbols. Thus, only the correlation properties of the spreading codes change due to scrambling, while the channel impulse response remains constant. The resulting channel estimation of the rake receiver is the mean over the estimations using every pilot symbol. Therefore, the rake receiver estimates a constant channel with mean correlation functions. Note that the mean correlation functions of the scrambled spreading codes are ideal, i. e. the mean cross correlation is approximately zero and the mean auto correlation is equal to the spreading factor for the time instant zero and approximately zero otherwise (cf. Figure 3 and 4). As a consequence, only the paths belonging to the rake fingers have to be taken into account for the channel estimation process.

The base station beamforming vector $\boldsymbol{w}_k^{\text{pilot}}$ for the pilot symbols is computed to maximize the power of the channel impulse response at the rake receiver k, while the transmitted power $(\boldsymbol{w}_k^{\text{pilot}})^H \boldsymbol{w}_k^{\text{pilot}}$ is the same for all mo-

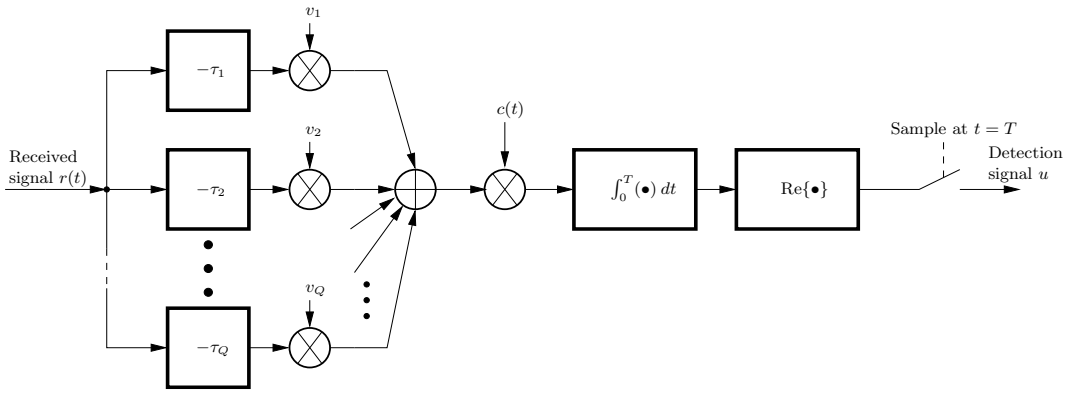

Figure 2: Rake receiver for BPSK.

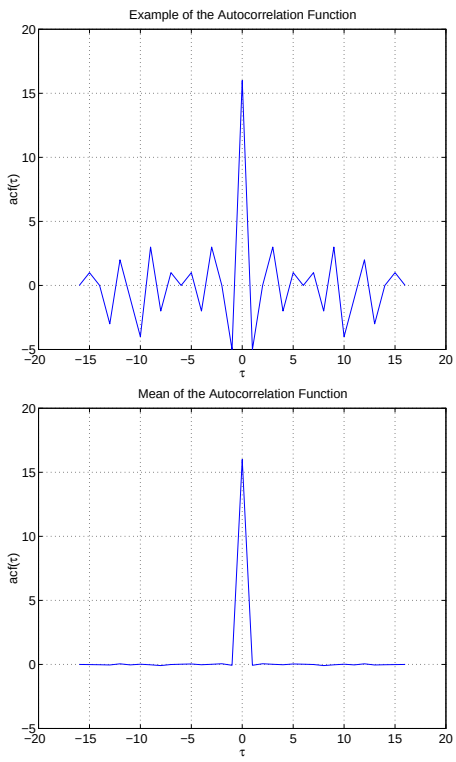

Figure 3: Instantaneous and averaged autocorrelation function of a scrambled spreading code of length $SF = 16$.

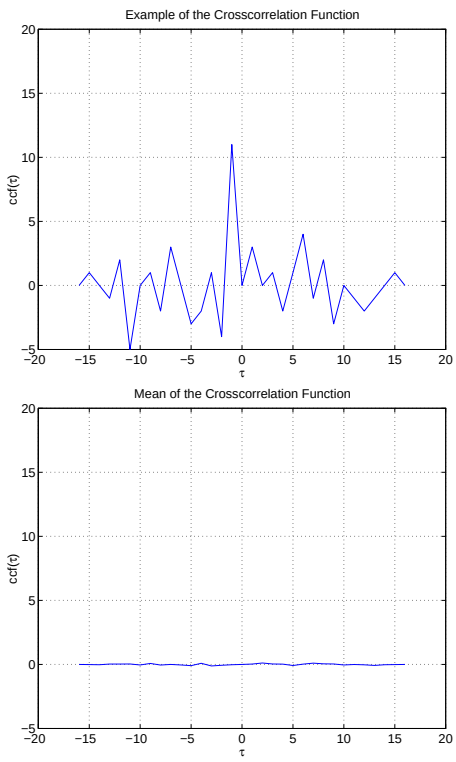

Figure 4: Instantaneous and averaged crosscorrelation function of a scrambled spreading code of length $SF = 16$.

biles. That leads to following optimization problem:

$$\max_{\boldsymbol{w}_k^{\text{pilot}}} \sum_{f=1}^{N_f} (\boldsymbol{w}_k^{\text{pilot}})^H \boldsymbol{a}_{k,f} p_{k,f}^2 \boldsymbol{a}_{k,f}^H \boldsymbol{w}_k^{\text{pilot}} = \max_{\boldsymbol{w}_k^{\text{pilot}}} (\boldsymbol{w}_k^{\text{pilot}})^H \boldsymbol{A}_k \boldsymbol{A}_k^H \boldsymbol{w}_k^{\text{pilot}},$$

$$\text{s. t.:} \quad (\boldsymbol{w}_k^{\text{pilot}})^H \boldsymbol{w}_k^{\text{pilot}} = 1,$$

where $\boldsymbol{A}_k = [\boldsymbol{a}_{k,1} p_{k,1}, \ldots, \boldsymbol{a}_{k,N_f} p_{k,N_f}] \in \mathcal{C}^{M \times N_f}$. The solution is the eigenvector belonging to the largest eigenvalue of $\boldsymbol{A}_k \boldsymbol{A}_k^H$.

The resulting predefined rake finger weight reads as:

$$v_{k,f} = p_{k,f} (\boldsymbol{w}_k^{\text{pilot}})^H \boldsymbol{a}_{k,f} e^{-j\varphi_{k,f}}. \tag{7}$$

IV. SYMBOL-WISE BEAMFORMING

After predefining the rake finger weights during the transmission of the pilot symbols, we can compute the base

station beamforming vector $\boldsymbol{w}_k^{(m)}$ of the mobile k for each symbol m providing the demanded value of the decision variable $u_k^{(m)}$ at the output of rake k. Also, we deploy the ability of power reduction due to the gain of the antenna array.

It is convenient to introduce following abbreviations:

$$\begin{aligned} \boldsymbol{b}_{k,q} &= p_{k,q}\boldsymbol{a}_{k,q}e^{-j\varphi_{k,q}} \in \mathcal{C}^M \\ \boldsymbol{z}_{k'}^{(m)} &= s_{k'}^{(m)}\boldsymbol{w}_{k'}^{(m)} \in \mathcal{C}^M. \end{aligned}$$

Thus, the rake decision signal of the mobile station k can be written as: $u_k^{(m)} =$

$$= \mathrm{Re}\left\{\sum_{k'=1}^{K}\sum_{q=1}^{Q}\sum_{f=1}^{N_f}\mathrm{CCF}_{k,k'}^{(m)}(\tau_{k,f}-\tau_{k,q})\upsilon_{k,f}\boldsymbol{b}_{k,q}^H\boldsymbol{z}_{k'}^{(m)}.\right\} \tag{8}$$

After collecting the vectors $\boldsymbol{z}_{k'}^{(m)}$ in a vector $\boldsymbol{z}^{(m)}$ and transforming to a real-valued representation, we end up with following representation of the output signal of the rake receiver k:

$$u_k^{(m)} = \sum_{q=1}^{Q}\sum_{f=1}^{N_f}(\boldsymbol{\gamma}_{k,f,q}^{(m)})^T\boldsymbol{x}^{(m)} = (\boldsymbol{\gamma}_k^{(m)})^T\boldsymbol{x}^{(m)}, \tag{9}$$

where

$$\boldsymbol{x}^{(m)} = \left[\mathrm{Re}\{\boldsymbol{z}^{(m)}\}^T, \mathrm{Im}\{\boldsymbol{z}^{(m)}\}^T\right]^T \in \mathcal{R}^{2MK},$$

$$\boldsymbol{z}^{(m)} = \left[(\boldsymbol{z}_1^{(m)})^T, \ldots, (\boldsymbol{z}_K^{(m)})^T\right]^T \in \mathcal{C}^{MK},$$

and

$$\boldsymbol{\gamma}_k^{(m)} = \sum_{q=1}^{Q}\sum_{f=1}^{N_f}\boldsymbol{\gamma}_{k,f,q}^{(m)} \in \mathcal{R}^{2MK},$$

$$\boldsymbol{\gamma}_{k,f,q}^{(m)} = \left[\mathrm{Re}\{\boldsymbol{g}_{k,f,q}^{(m)}\}^T, \mathrm{Im}\{\boldsymbol{g}_{k,f,q}^{(m)}\}^T\right]^T \in \mathcal{R}^{2MK},$$

with

$$\begin{aligned} \boldsymbol{g}_{k,f,q}^{(m)} = \Big[&\mathrm{CCF}_{k,1}^{(m)}(\tau_{k,f}-\tau_{k,q}), \ldots, \\ &\ldots, \mathrm{CCF}_{k,K}^{(m)}(\tau_{k,f}-\tau_{k,q})\Big]^T \otimes (\upsilon_{k,f}^*\boldsymbol{b}_{k,q}) \in \mathcal{C}^{MK}, \end{aligned}$$

where '$\otimes$' denotes the Kronecker product.

Our goal is to provide the demanded level for the decision signal of every rake receiver, in other words, we have to fulfill K requirements. Note that the number of degrees of freedom is larger than the number of restrictions. We can use the remaining degrees of freedom to reduce the transmitting power at the base station. This leads to following optimization problem:

$$\min_{\boldsymbol{x}^{(m)}} \|\boldsymbol{x}^{(m)}\|_2^2, \qquad \text{s. t.:} \quad \boldsymbol{\Gamma}^{(m)}\boldsymbol{x}^{(m)} = \boldsymbol{\theta}. \tag{10}$$

where

$$\boldsymbol{\Gamma}^{(m)} = \left[s_1^{(m)}\boldsymbol{\gamma}_1^{(m)}, \ldots, s_K^{(m)}\boldsymbol{\gamma}_K^{(m)}\right]^T \in \mathcal{R}^{K\times 2MK}$$

and

$$\boldsymbol{\theta} = [\theta_1, \ldots, \theta_K]^T \in \mathcal{R}_+^K.$$

The parameter $\theta_k \in \mathcal{R}_+$ of the constraint in Equation (10) is the absolute value of the demanded decision signal of the rake receiver k. The needed θ_k can be chosen individually for each mobile k, therefore, fast transmit power control (TPC) can be easily implemented by adapting θ_k depending on the TPC commands.

The solution of the optimization problem of Equation (10) can be written as:

$$\boldsymbol{x}^{(m)} = (\boldsymbol{\Gamma}^{(m)})^T\left(\boldsymbol{\Gamma}^{(m)}(\boldsymbol{\Gamma}^{(m)})^T\right)^{-1}\boldsymbol{\theta}. \tag{11}$$

V. LOOK-DIRECTION BEAMFORMING

We compare the symbol-wise downlink beamforming algorithm with a slot-wise downlink beamforming algorithm, where the base station beamforming vectors are chosen to form a beamforming pattern which shows in the look-direction of the respective mobile station. This approach does not take into account the changing correlation properties of the utilized spreading codes. We also presume a DOA estimation in the uplink, but we deploy the steering vector $\boldsymbol{a}_{k,q}$ of the "strongest" path q form the base station to the mobil k. The strongest path – the look-direction – is determined by the largest transmission value $p_{k,q}$. Because the look-direction beamforming only regards one single path, the index q can be dropped , thus, the steering vector and the path transmission factors are denoted by $\boldsymbol{a}_k$ and p_k, respectively. The idea is to transmit into the direction from where most of the uplink signal power was received. Thus, the beam shaped by the vector $\boldsymbol{w}_k$ can equally be formed by use of the steering vector $\boldsymbol{a}_k$. To consider the near-far effect we have to multiply the beamforming vector with the reciprocal of the path transmisson factor. Consequently, the resulting beamforming vector reads as:

$$\boldsymbol{w}_k = \frac{1}{p_k}\boldsymbol{a}_k \quad \in \quad \mathcal{C}^M. \tag{12}$$

VI. SIMULATION RESULTS

Our simulation scenario includes $K = 14$ mobiles, where $Q = 7$ paths connect each mobile with the base station. The directions of arrival $\boldsymbol{a}_{k,q}$ and the path transmission factors $p_{k,q}, k = 1, \ldots, K$ and $q = 1, \ldots, Q$, are constant. The path phase shifts $\varphi_{k,q}$ and the delay times $\tau_{k,q}$ are uniformly distributed within the intervals $[0, 2\pi]$ and $[-\tau_{\max}, +\tau_{\max}]$, respectively. The delay spread $\tau_{\max}$ is $2\mu s$ which is about the half of a symbol time for the used spreading factor $SF = 16$. The rake receiver oversamples with $OSF = 4$ and has $N_f = 3$ fingers. The transmission power $\sum \|\boldsymbol{w}_k\|_2^2$ is set to $1 \hat{=} 0\ dB$ and is the same for both the slot-wise and symbol-wise beamforming. Also,

Table 2: BERs for look-direction slot-wise downlink beamforming and symbol-wise downlink beamforming

mobile station	1	2	3	4	5	6	7
BER – slot-wise	$1.95 \cdot 10^{-2}$	$0.43 \cdot 10^{-2}$	$8.63 \cdot 10^{-2}$	$4.88 \cdot 10^{-2}$	$0.14 \cdot 10^{-2}$	$1.62 \cdot 10^{-2}$	$0.92 \cdot 10^{-2}$
BER – symbol-wise	$3.35 \cdot 10^{-3}$	$2.49 \cdot 10^{-3}$	$0.41 \cdot 10^{-3}$	0.01	$0.05 \cdot 10^{-3}$	$5.57 \cdot 10^{-3}$	$0.19 \cdot 10^{-3}$
mobile station	8	9	10	11	12	13	14
BER – slot-wise	$0.66 \cdot 10^{-2}$	$0.15 \cdot 10^{-2}$	$1.20 \cdot 10^{-2}$	0	$0.01 \cdot 10^{-2}$	0	0
BER – symbol-wise	$1.06 \cdot 10^{-3}$	$4.01 \cdot 10^{-3}$	$6.60 \cdot 10^{-3}$	0	0	0	0

the additive white Gaussian noise which models the intercell interference and noise is the same for all mobiles and both beamforming methods and we chose a value of $-10\,dB$ with respect to the transmission power. The simulation parameters are listed in Table 1. Each slot consists of 2560 symbols or 40960 chips which is equal to the length of the used Gold scrambling sequence. The results shown in Table 2 and 3 are the mean of 150 simulations.

Table 1: Simulation parameters

parameter	value
M	3
K	14
Q	7
OSF	4
N_f	3
T_c	$0.2441\mu s$
$T_1, \ldots, T_{14}$	$3.9062\mu s$
$SF_1, \ldots, SF_{14}$	16
slot length	2560 symbols
$\tau_{\max}$	$2\mu s$
transmission power	$1 \hat{=} 0\,dB$
noise and intercell-interference	$0.1 \hat{=} -10\,dB$
trials	150

Table 3: Mean BERs for look-direction slot-wise downlink and symbol-wise downlink beamforming

	slot-wise	symbol-wise
mean BER	$1.47 \cdot 10^{-2}$	$1.70 \cdot 10^{-3}$

We observe a significant improvement of the BER with the symbol-wise beamforming compared to the slot-wise look-direction method. However, the BER for mobile 9 is higher for symbol-wise beamforming than for slot-wise beamforming. The explanation can be found in the very large path transmission factors $p_{9,q}$ of mobile 9. In the development of the symbol-wise downlink beamforming algorithm we made the assumption that the delay spread $\tau_{\max}$ is small enough so that we can neglect the signal portions due to the previously and afterwards transmitted symbols. This assumption holds as long as the path attenuations of the weaker paths is large – the transmission factors are small – enough. In the case of mobile 9, the weaker paths are very strong (0.98, 0.9, 0.8, 0.5), thus, the probability that the assumption does not hold is higher than for mobile 5 (0.6, 0.5, 0.4, 0.2).

VII. CONCLUSION

We presented a new symbol-wise downlink beamforming algorithm which presumes a feedback of the path phase shifts from the mobile stations to the base station. The algorithm takes into account the channel parameters estimated in the uplink and the correlation properties of the scrambled spreading sequences. Although these properties are bad, we are able to reduce the disadvantageous interference caused by intersymbol and co-channel interference. Our simulation results have shown that the BER performance and, therefore, the system capacity can be increased significantly by regarding the correlation properties of the scrambled spreading codes and adapting the downlink beamforming vectors symbol-wise.

VIII. REFERENCES

[1] E. H. Dinan and B. Jabbari. Spreading Codes for Direct Sequence CDMA Cellular Networks. *IEEE Communications Magazine*, September 1998.

[2] C. Brunner, M. Joham, W. Utschick, M. Haardt, and J.A. Nossek. Downlink Beamforming for WCDMA based on Uplink Channel Parameters. In *Proceedings of the 3rd European Personal Mobil Communications Conference*, 1999.

[3] E. Dahlman, B. Gudmundson, M. Nilsson, and J. Skold. UMTS/IMT-2000 Based on Wideband CDMA. *IEEE Communications Magazine*, September 1998.

[4] J. G. Proakis. *Digital Communications*. McGraw-Hill, Inc., 1995.